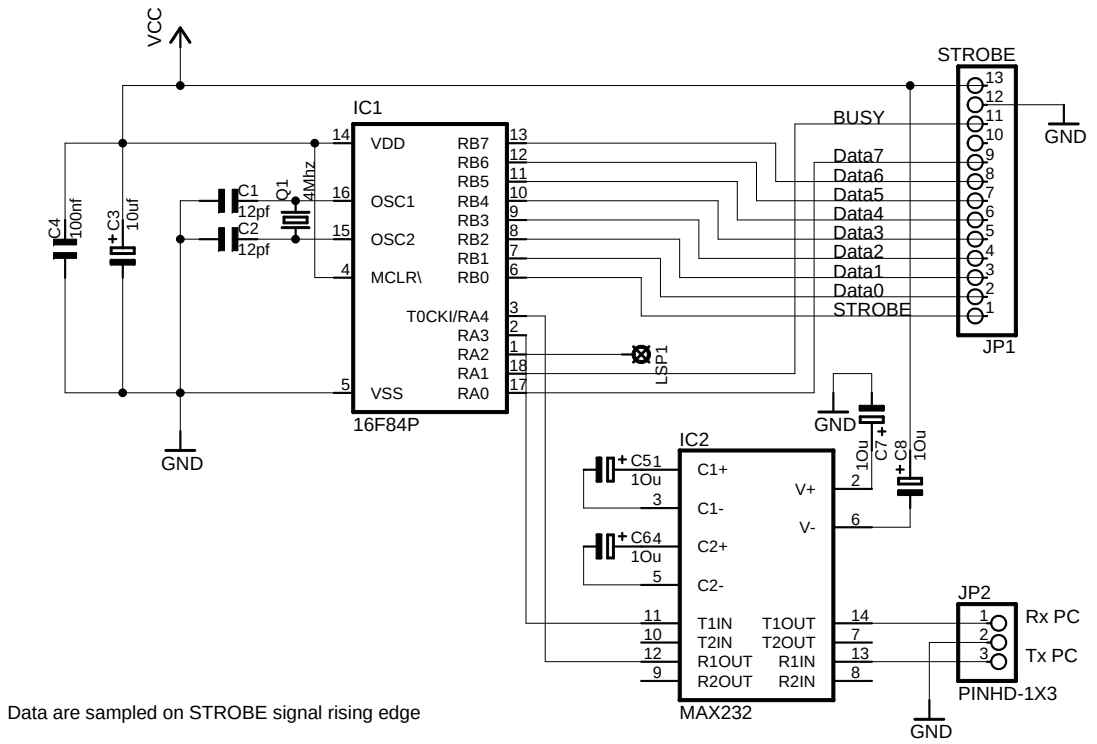

Data are sampled on STROBE signal rising edge

Centronics to RS232 Converter

TITLE: PicCentronics

Document Number:

REV:

Date: not saved!

Sheet: 1/1