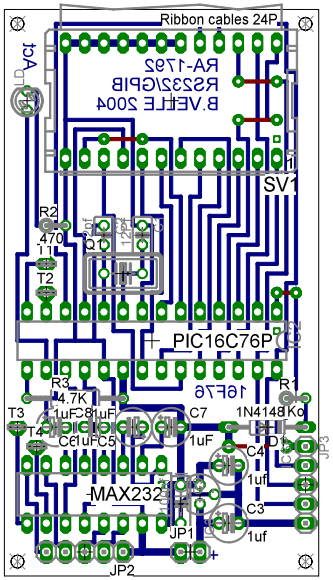
Ribbon cables 24P
RA-1792
RS232/GPIB
B.VEHLE 2004
SV1
R2
470
T2
PIC16C76P
16F76
R3
4.7K
T3
T4
C8 1uF
C6 1uF
C5
C7
1uF
1N4148
D1
R1
Ko
C4
1uf
C3
1uf
MAX232
JP1
JP2
JP3