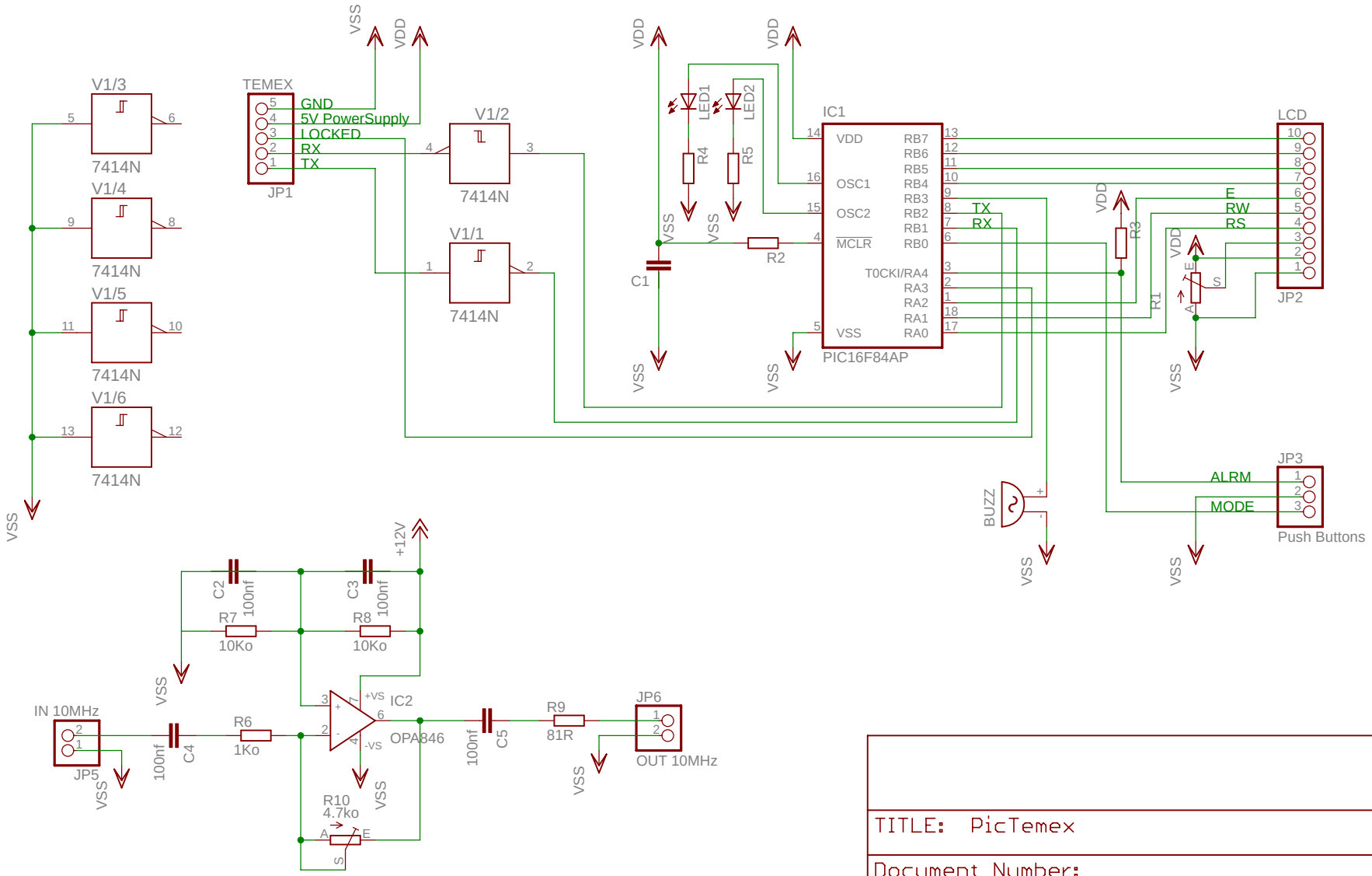

TITLE: PicTemex

Document Number:

REV:

Date: 18/05/2012 13:57:17

Sheet: 1/1